ARROW

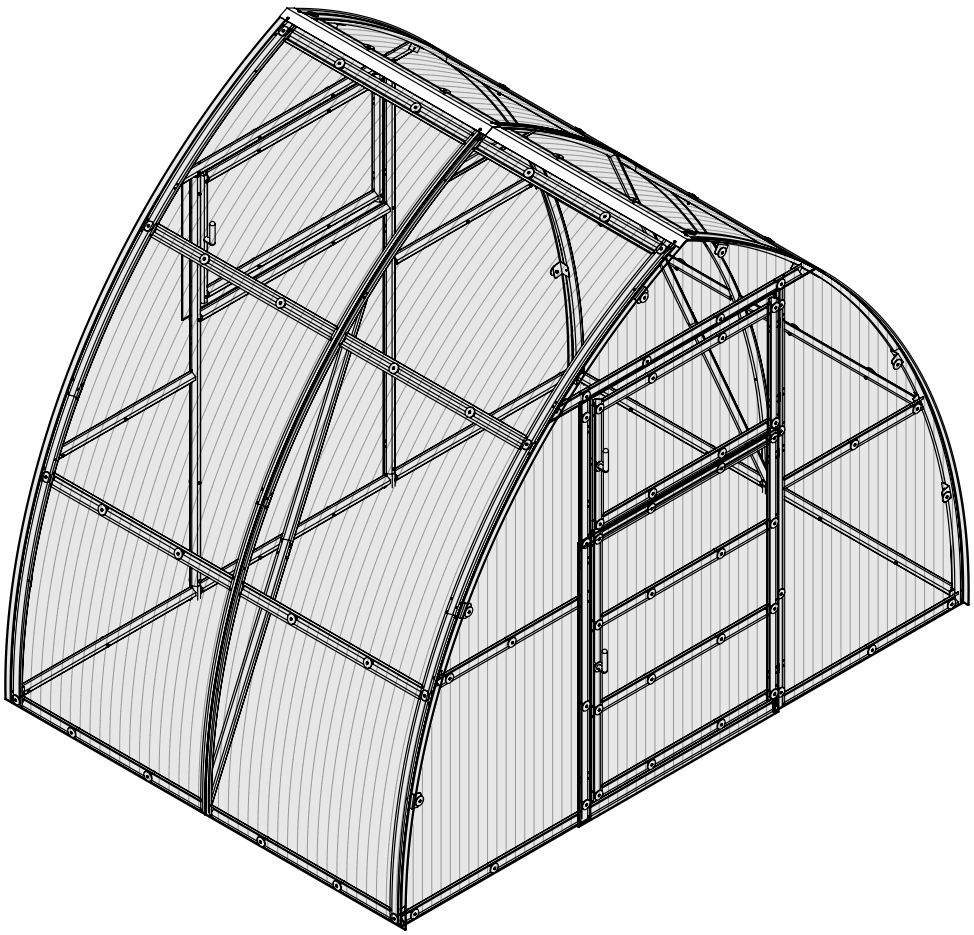

THE LIST OF PARTS

1 (6x) 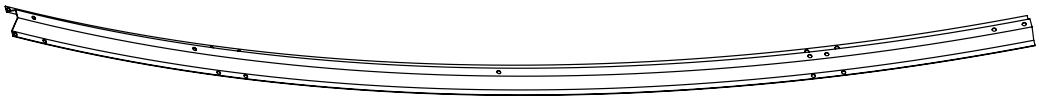 L=1650mm

2 (6x) 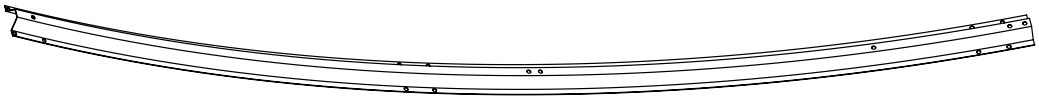 L=1650mm

3 (2x)  L=1255mm

4 (10x) 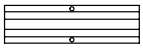 L=200mm

5 (4x) 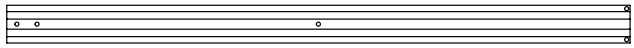 L=925mm

6 (4x)  L=740mm

7 (4x)  L=1060mm

8 (4x) 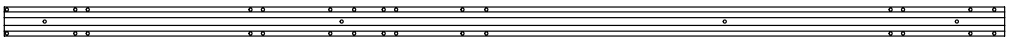 L=1930mm

8.1 (4x)  L=360mm

9 (1x)  L=375mm

10 (3x)  L=985mm

11 (16x) 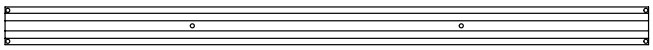 L=955mm

D1 (2x) 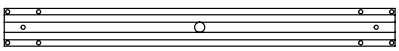 L=580mm

D2 (2x) 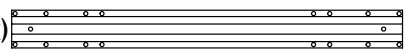 L=580mm

D3 (8x) 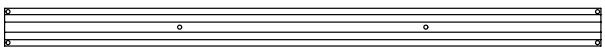 L=885mm

D4 (1x) 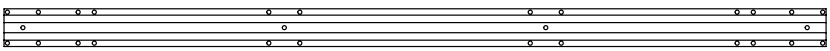 L=1220mm

D5 (1x) 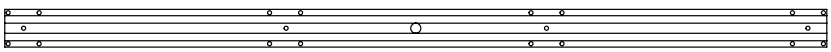 L=1220mm

C7 (2x) 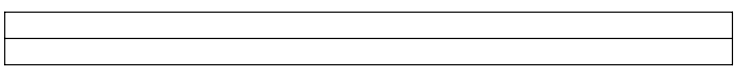 L=1080mm

THE LIST OF PARTS

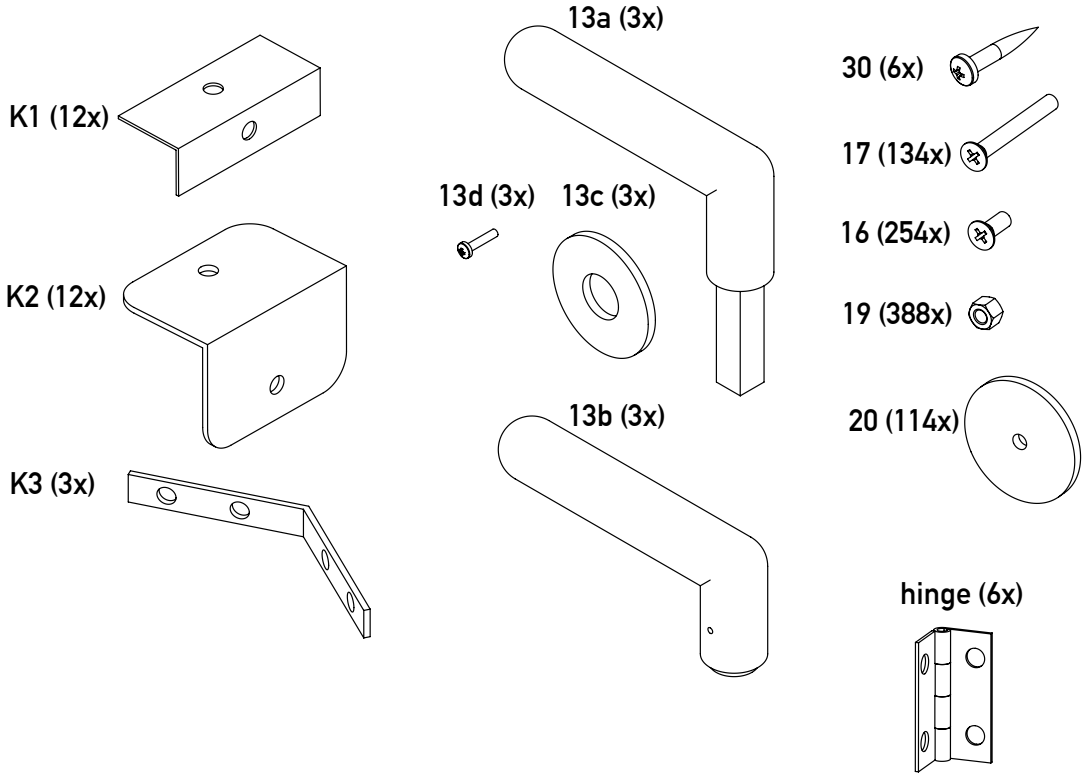

polycarbonate sheet

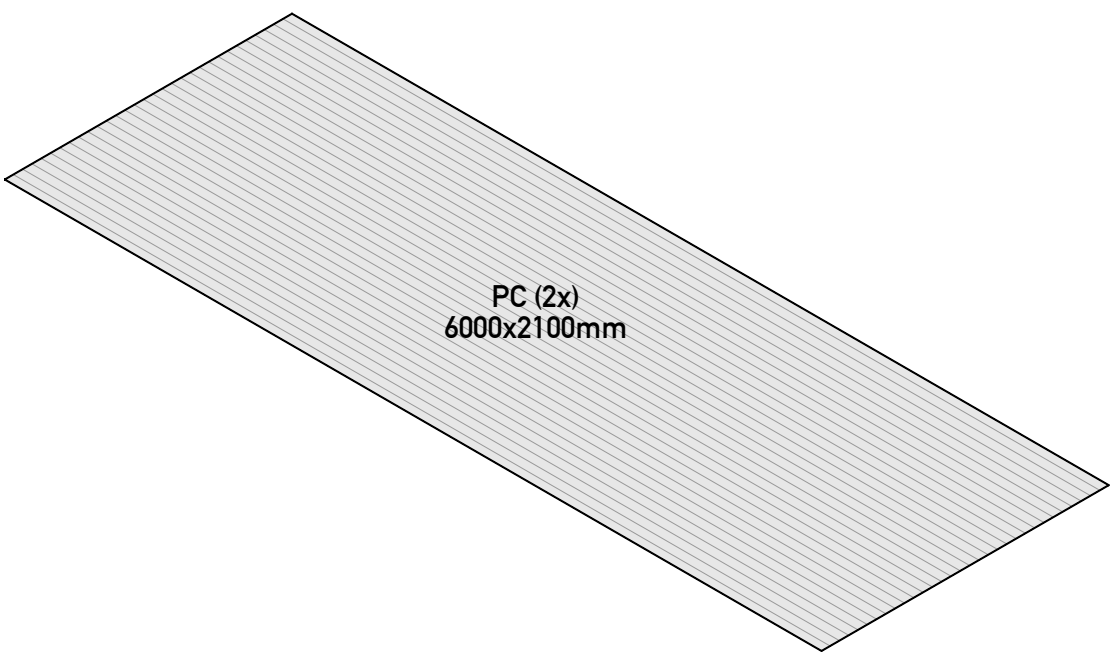

polycarbonate sheet №1

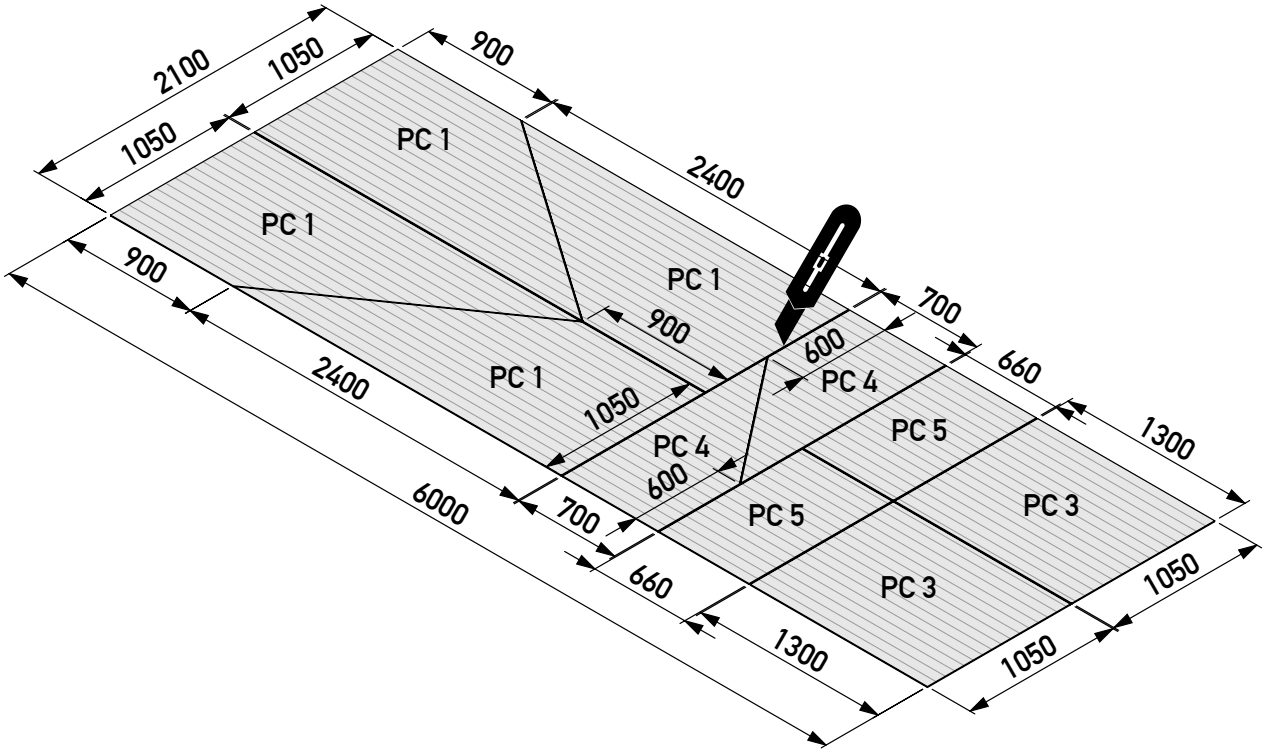

polycarbonate sheet №2

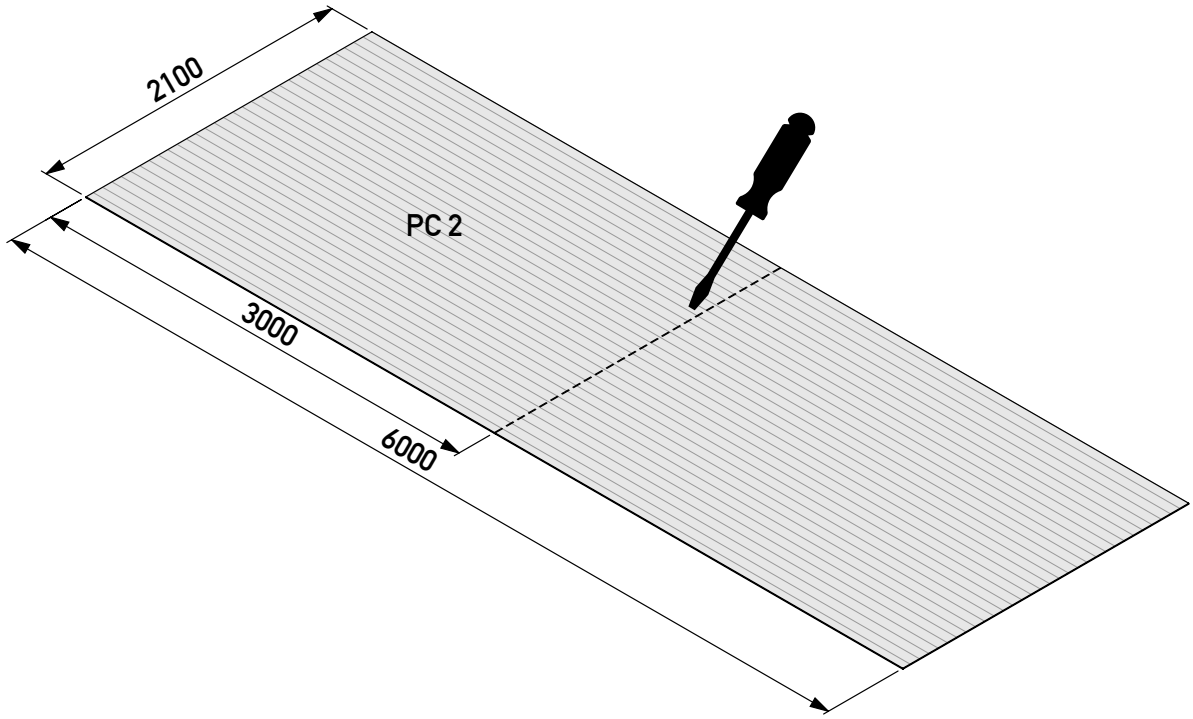

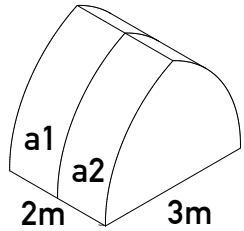

THE LIST OF PARTS 6m2

№	Name	Length, mm	Qty
1	Arch (down)	1650	6
2	Arch (top)	1650	6
3	Side - bottom stilt of the arch(left, right)	1255	2
4	Pillars to the ground	200	10
5	Fixing the door-window pillar to the ground	925	4
6	Fixing the door-window pillar to the arch	740	4
7	Reinforcement	1060	4
8	Profile for the fastening	1930	4
8.1	Profile for the fastening	360	4
9	Fixing profile for arches	375	1
10	Side fastenings of the front - back part	985	3
11	Fastenings of the arches - crossbars	955	16
13	Handle		3
16	Screws M5-12 with the injectable head		254
17	Screws M5-40		144
19	Internal screws M5		398
20	Gasket slides		114
21	Hinge		6
30	Screws self-threading		6
C7	Ridge	1080	2
K1	Angles of attaching polycarbonate and stilt (Small angle)		12
K2	Angles of attaching polycarbonate and stilt (Big angle)		12
K3	Connection of top post (plate with 4 holes)		3
	Door (top part) – small		
D1	Part of the door with hinges	580	2
D2	Part of the door	580	2
D3	Bottom/top part of the door (horizontal part)	885	8
	Door (bottom part) – large		
D4	Part of the door	1220	1
D5	Part of the door with hinges	1220	1
	Polycarbonate sheets		
PC	Polycarbonate sheet	2100x6000	2

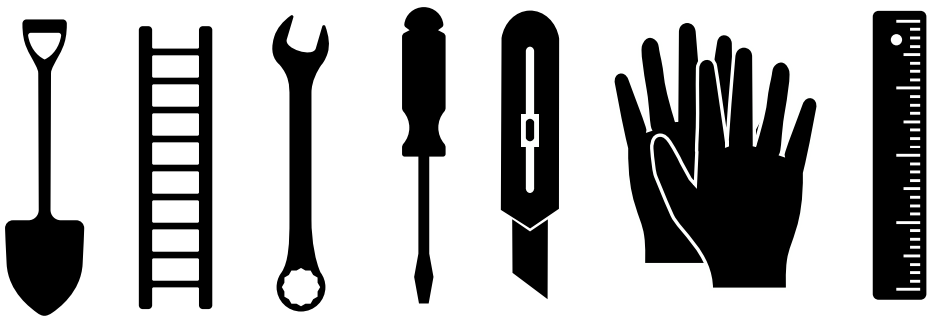

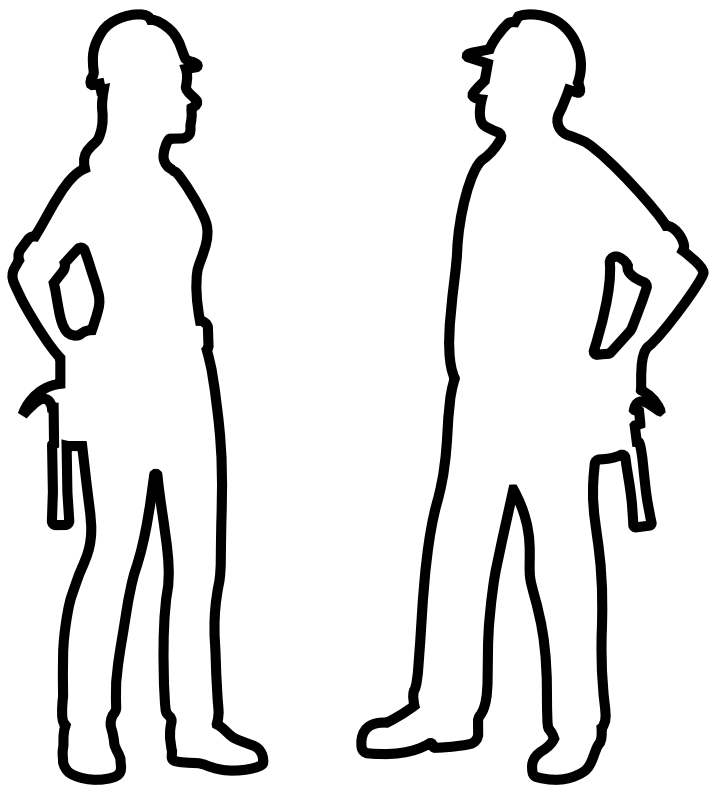

1

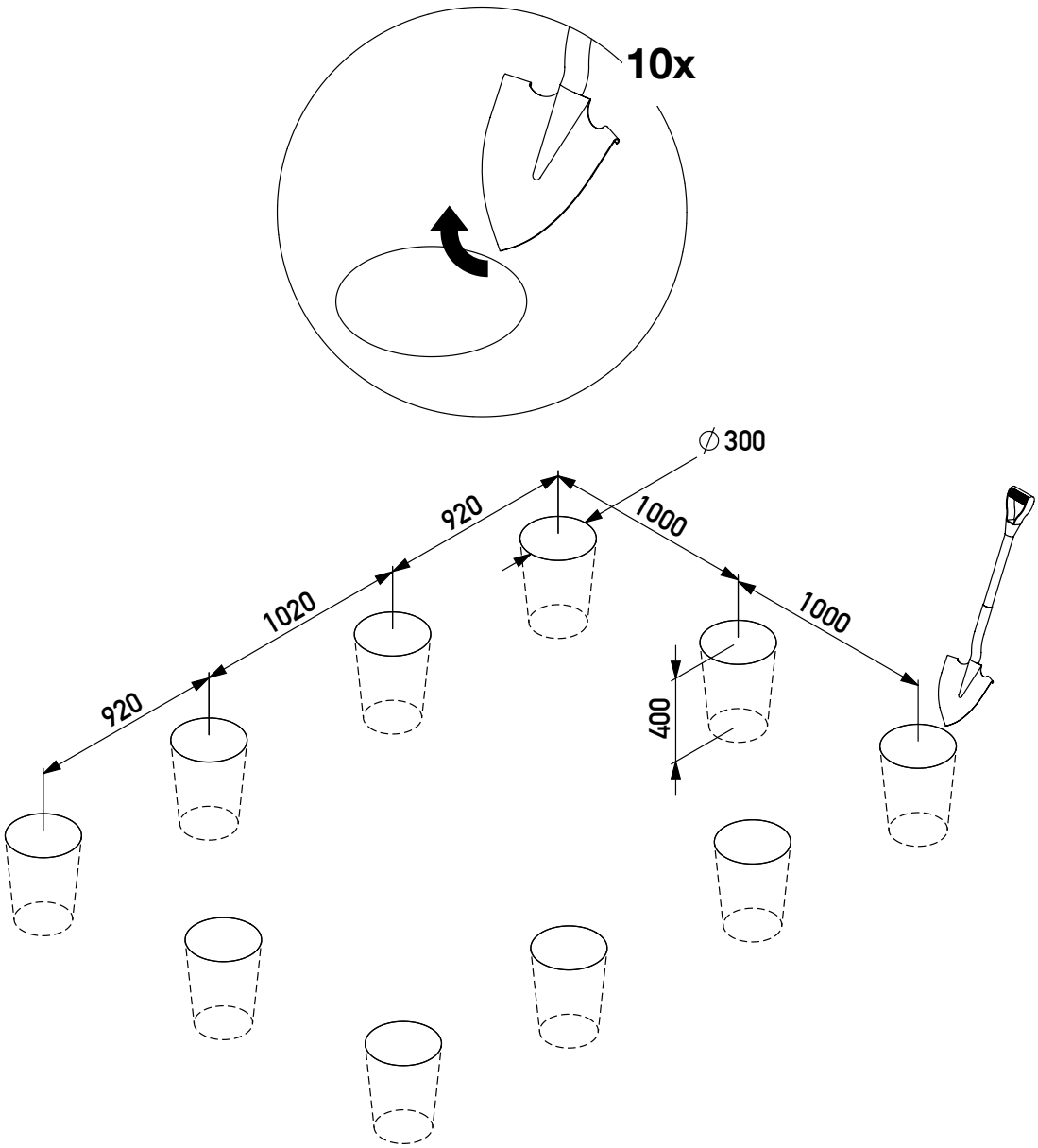

2

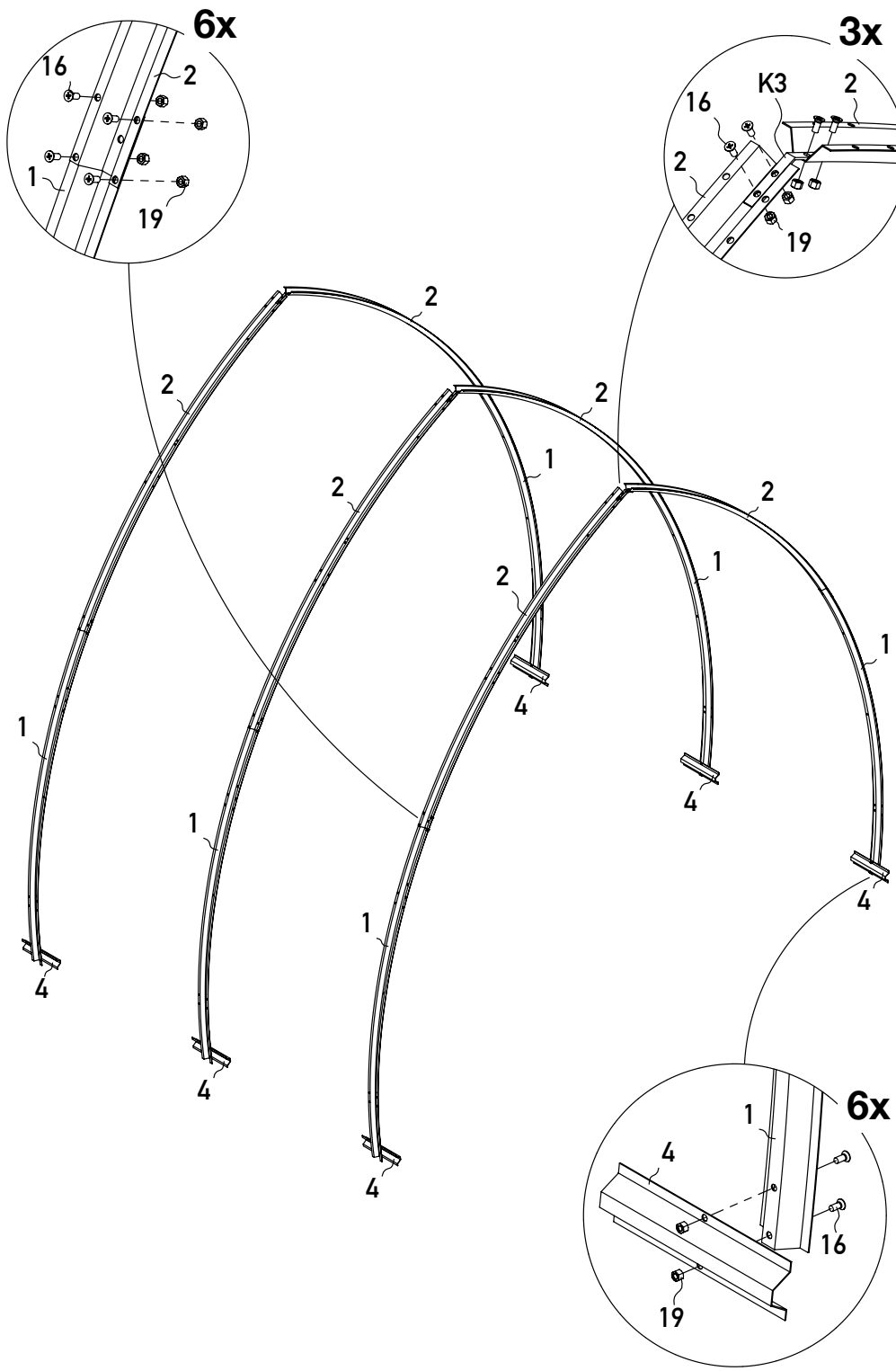

3

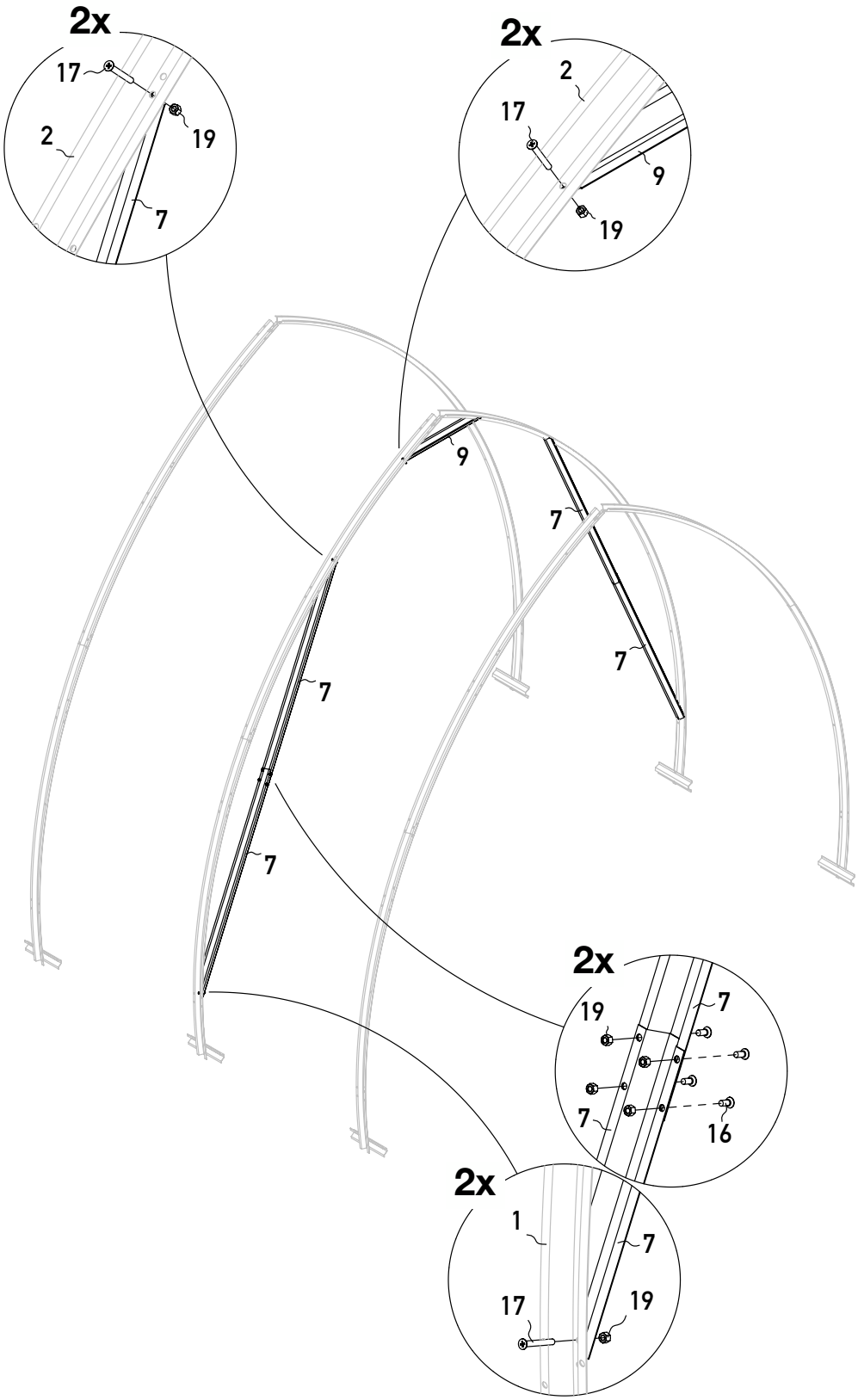

4

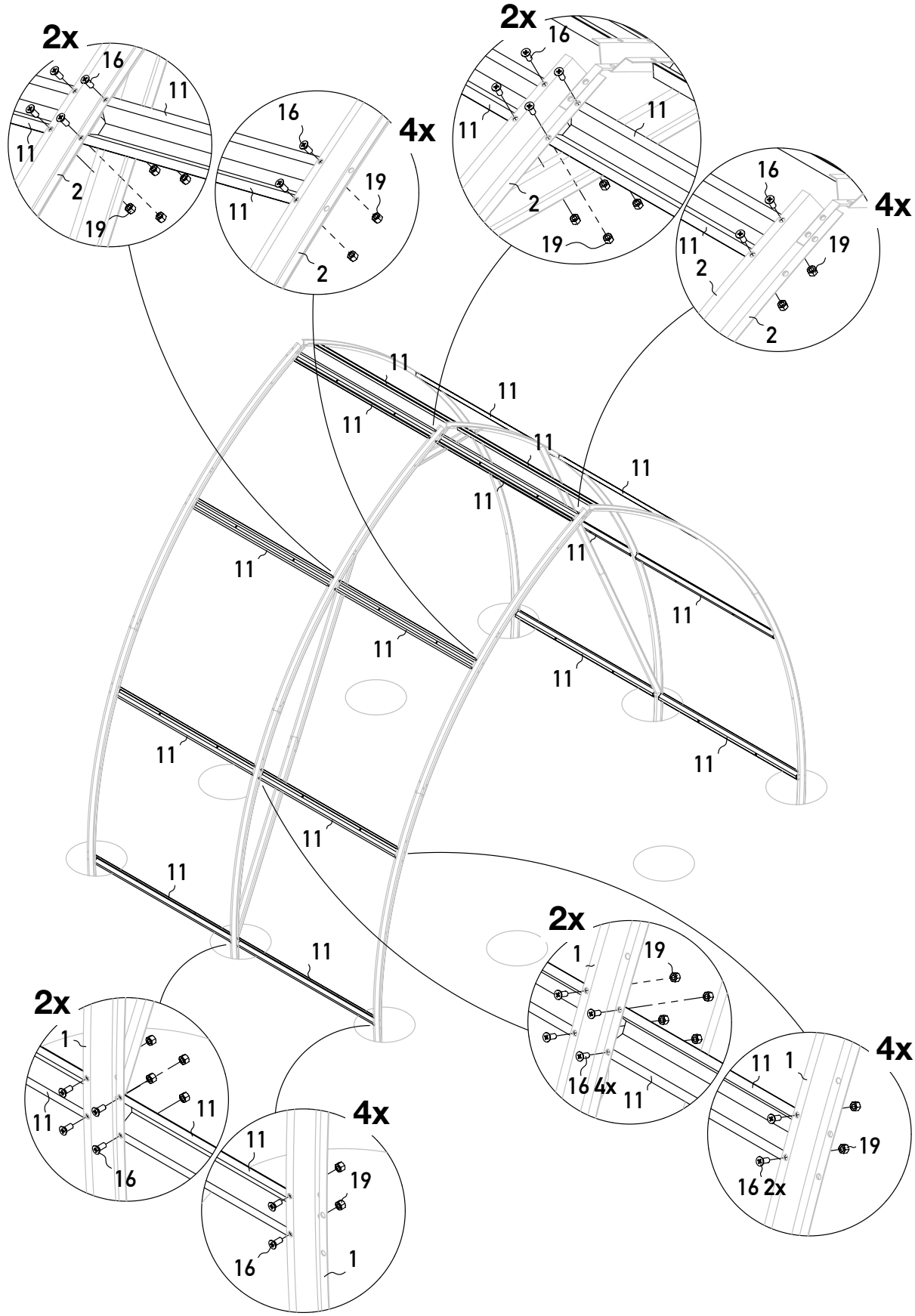
2x
16
11
11
2
19
4x
16
19
11
2
2x
16
11
11
2
19
4x
16
19
11
2
2
11
11
11
11
11
11
11
11
11
11
11
11
11
2x
1
19
16 4x
11
4x
11
1
19
16 2x
2x
1
11
11
16
4x
11
19
16
1

5

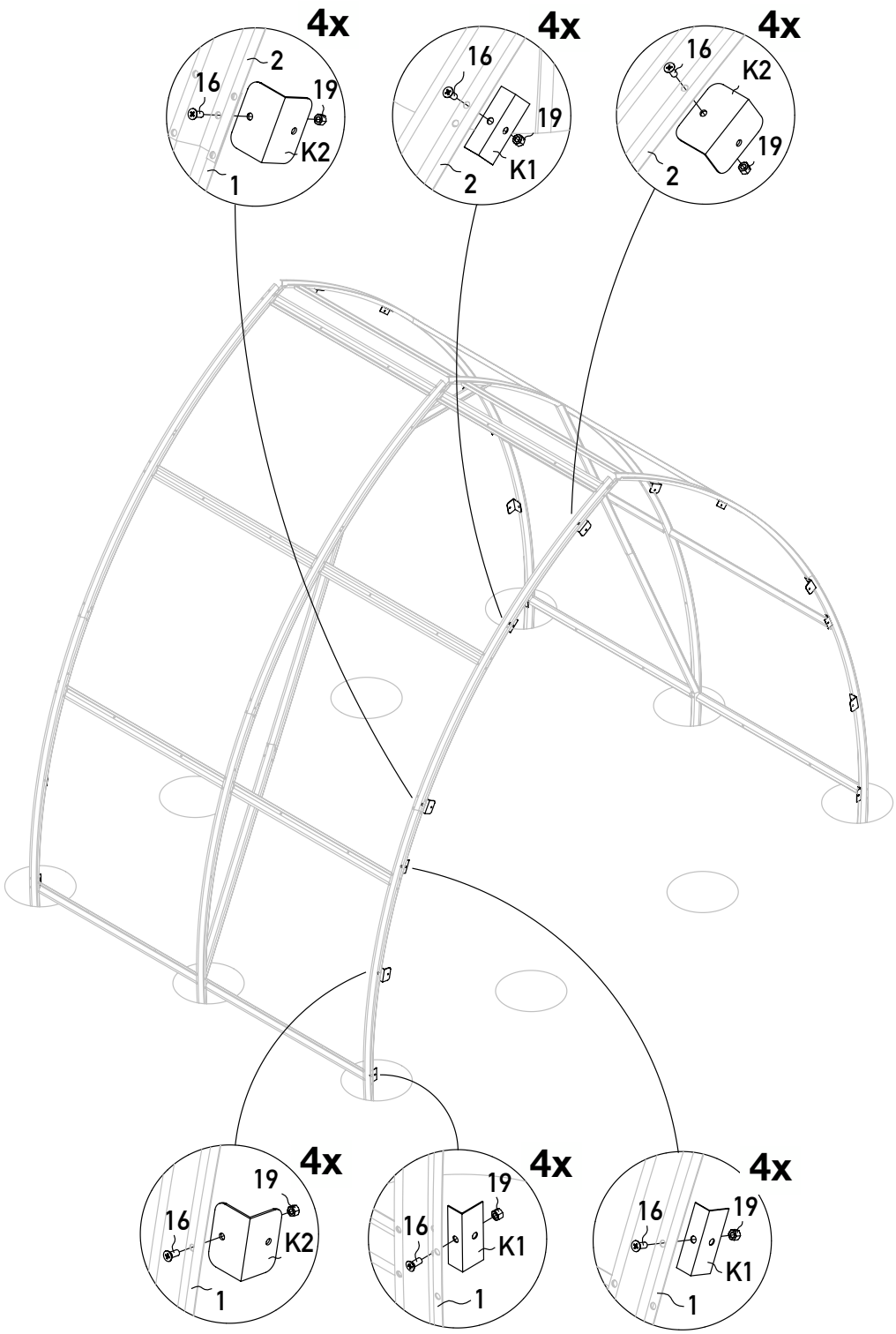
4x
2
16
19
K2
1
4x
16
19
K1
2
4x
16
K2
19
2
4x
19
16
K2
1
4x
19
16
K1
1
4x
16
19
K1
1

6

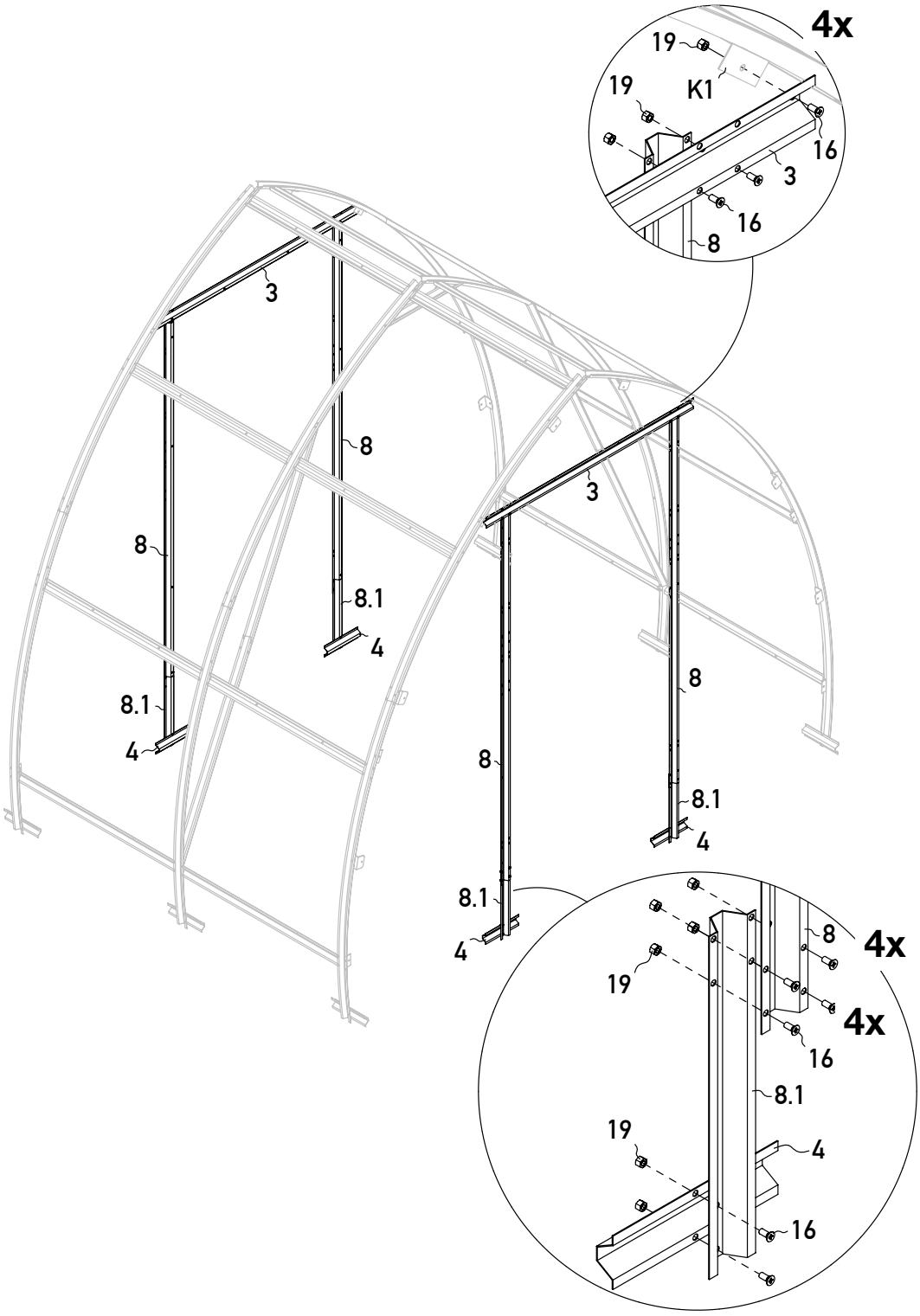

7

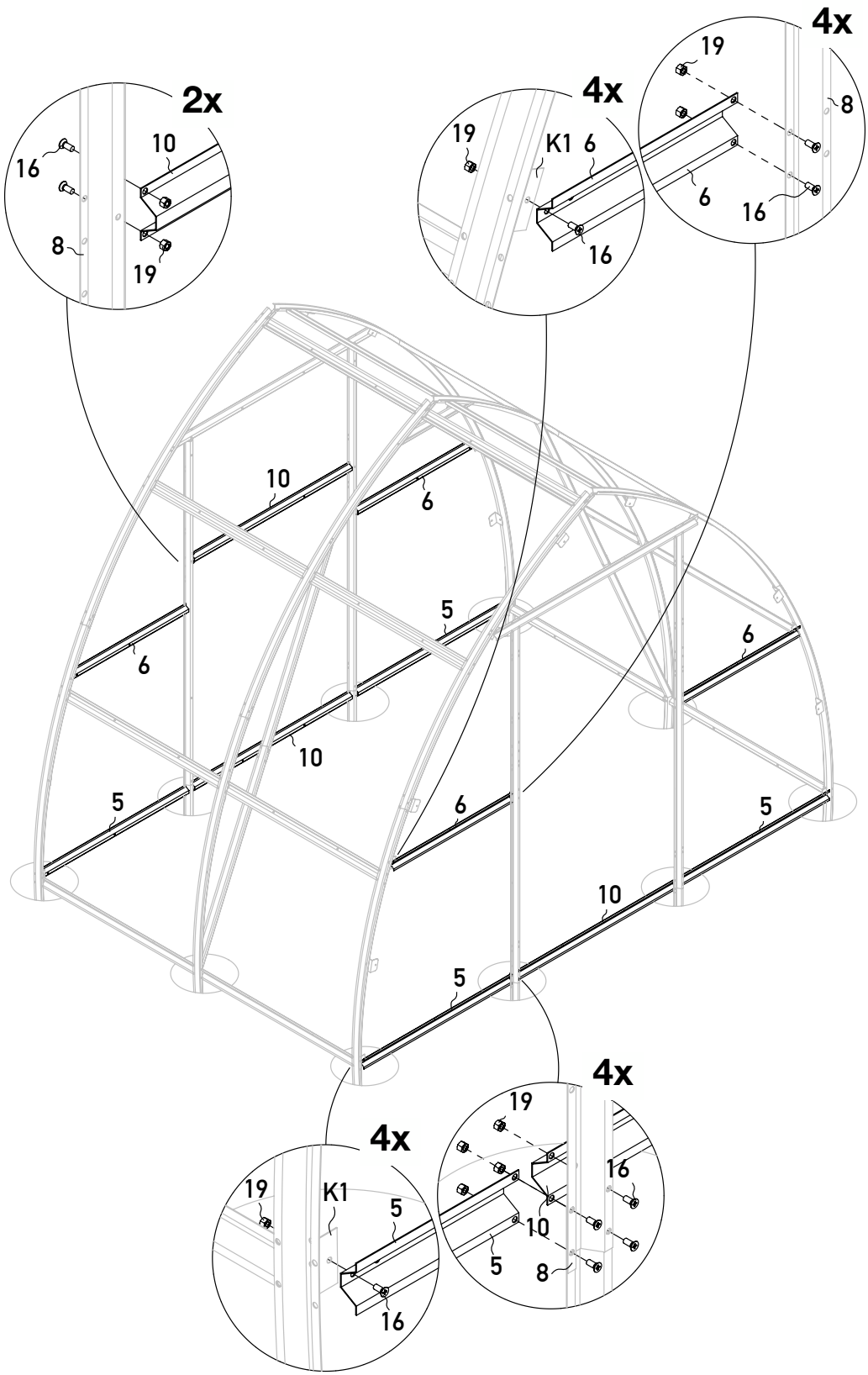
2x
16
10
8
19
4x
19
K1
6
16
4x
19
8
6
16
10
6
5
6
6
10
5
6
5
10
5
4x
19
K1
5
16
4x
19
16
10
5
8

8

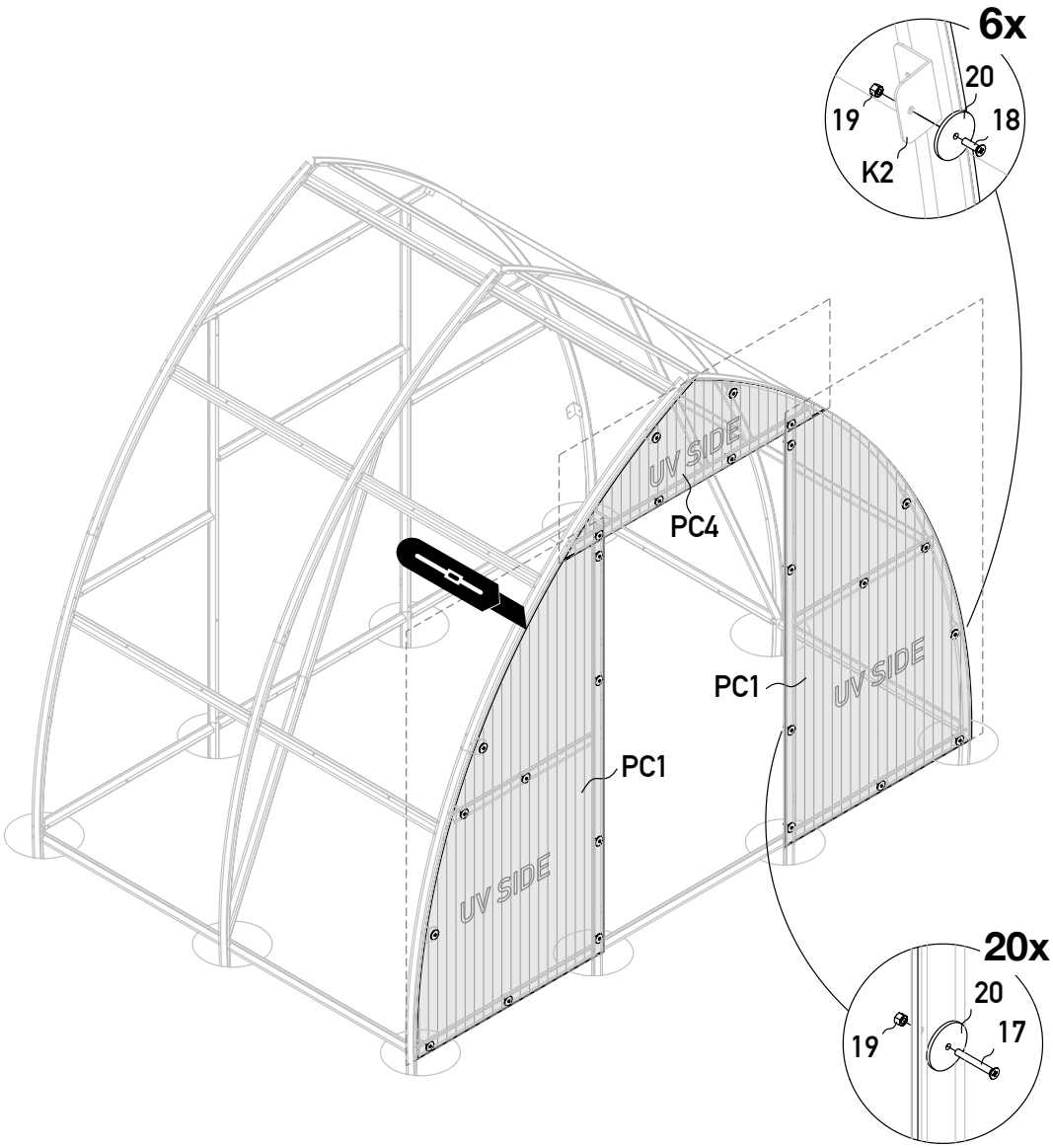

9

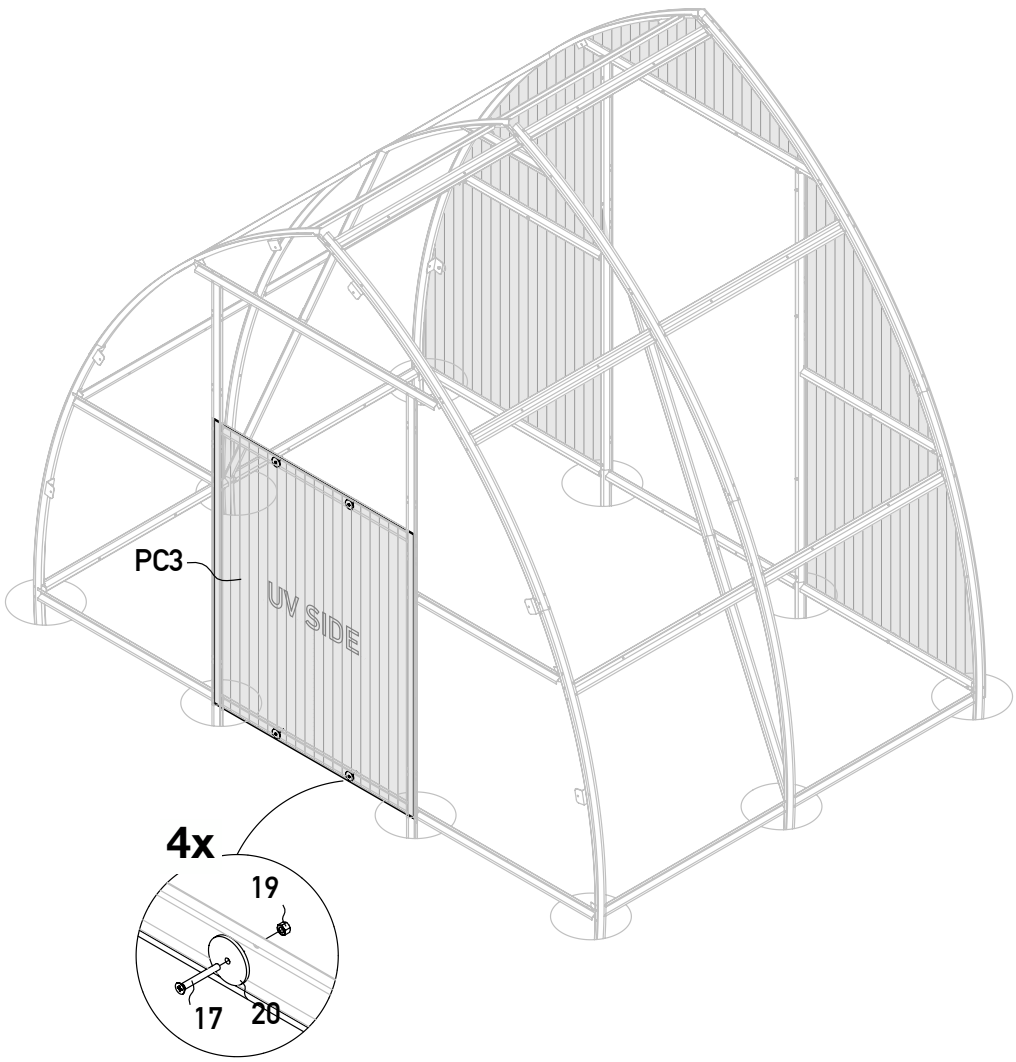

10

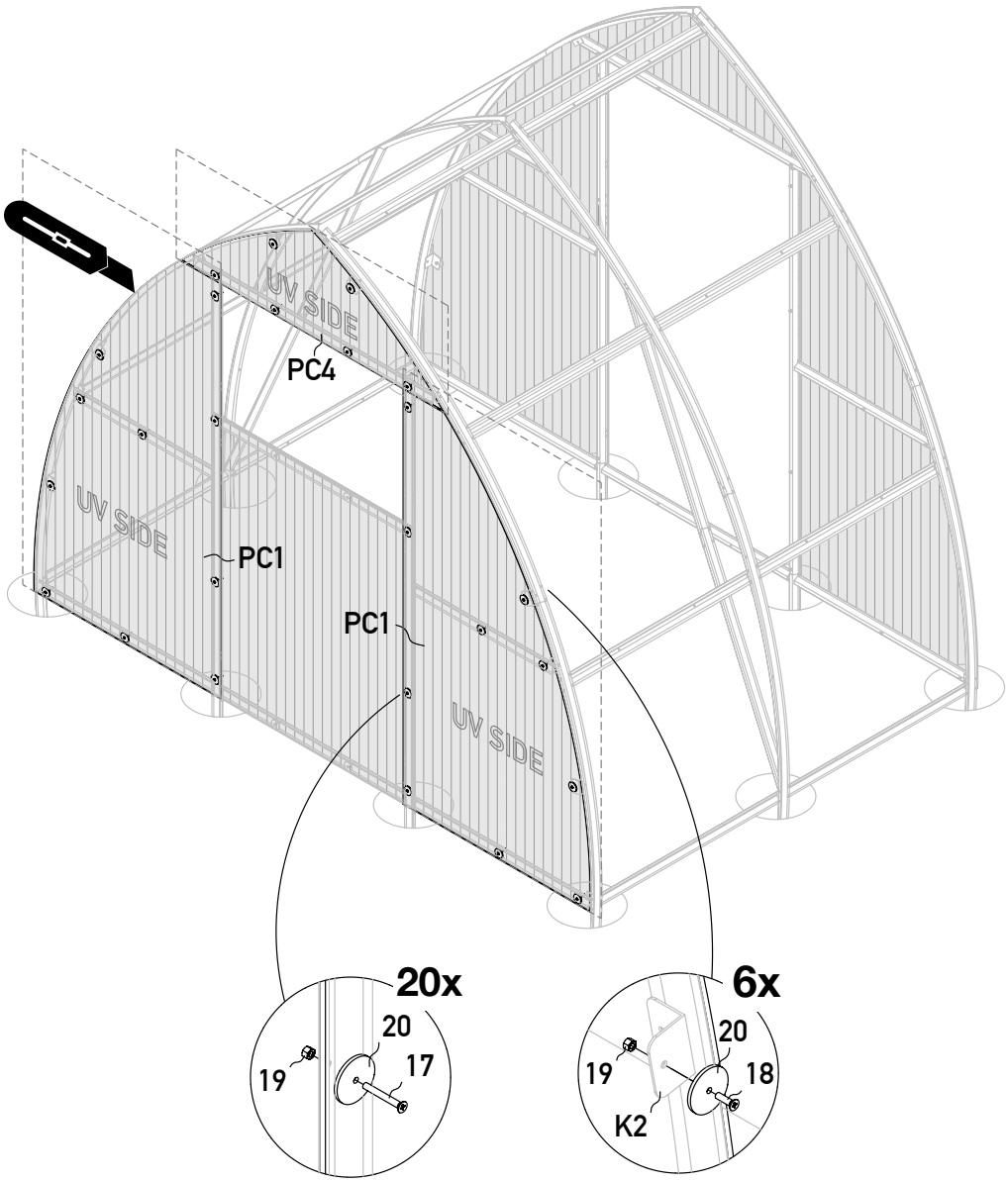

11

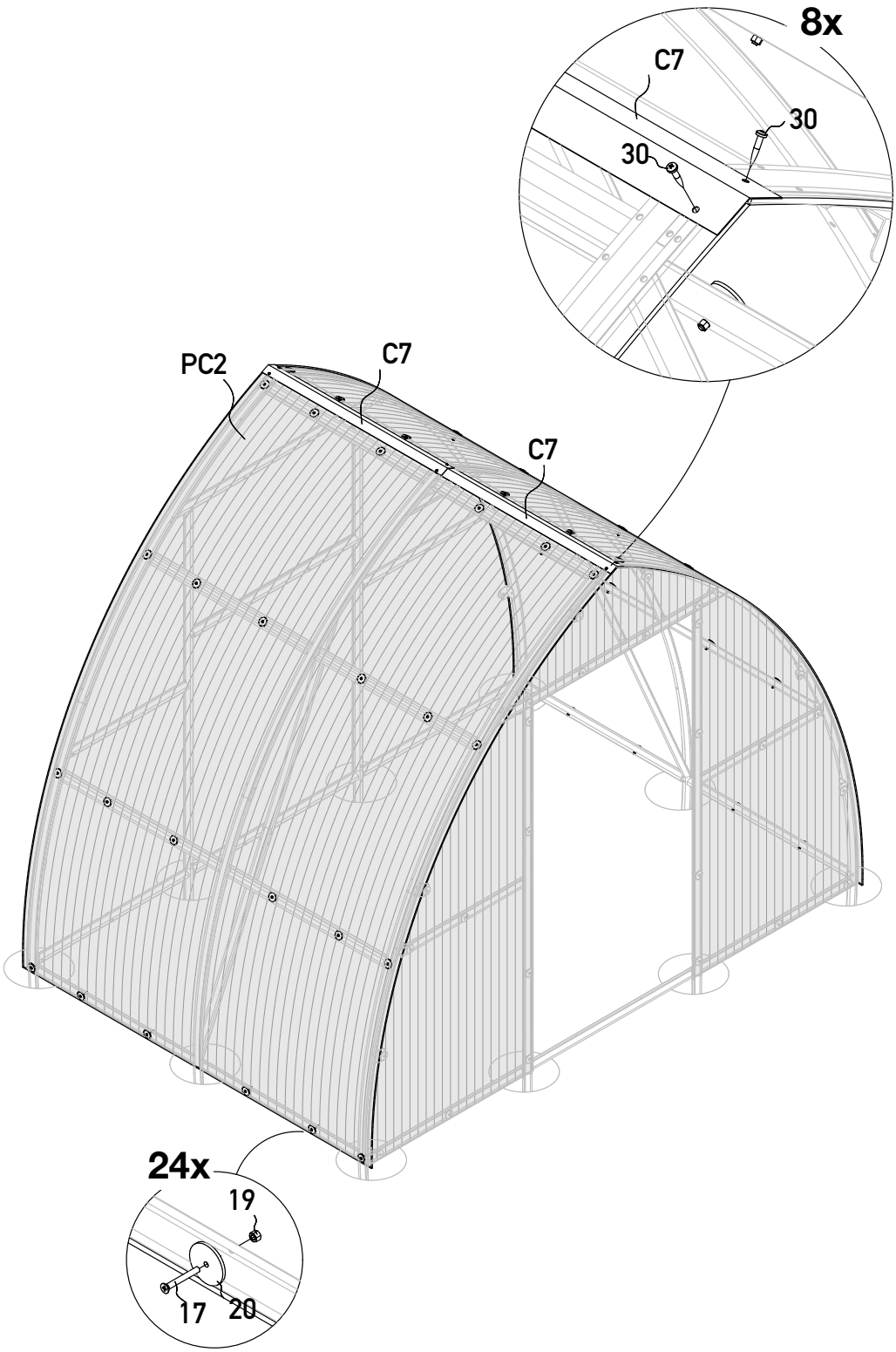

12 2x

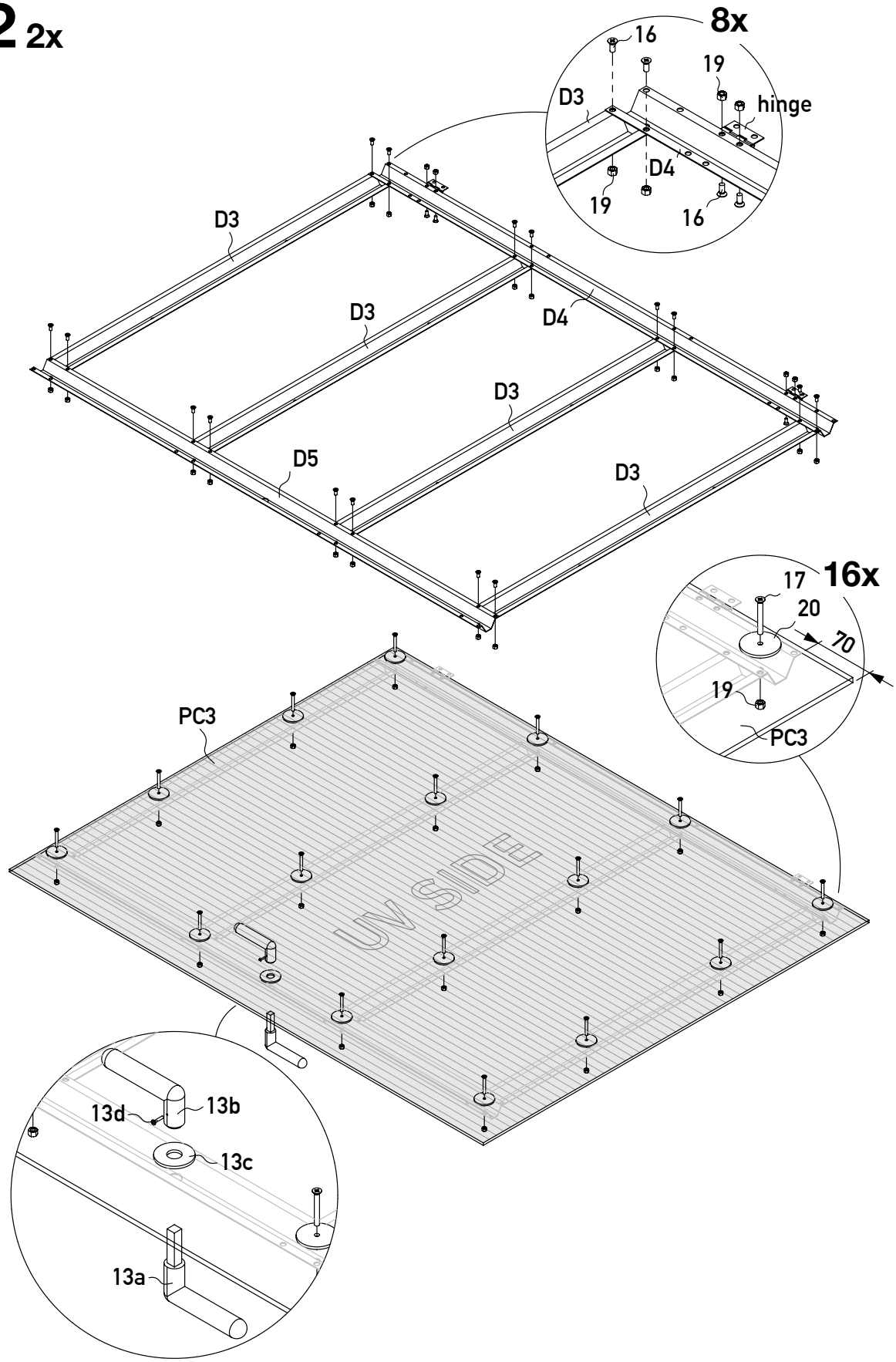
8x
16
19
D3
hinge
D4
19
16
D3
D3
D4
D3
D5
D3
16x
17
20
70
19
PC3
PC3
13d
13b
13c
13a

13

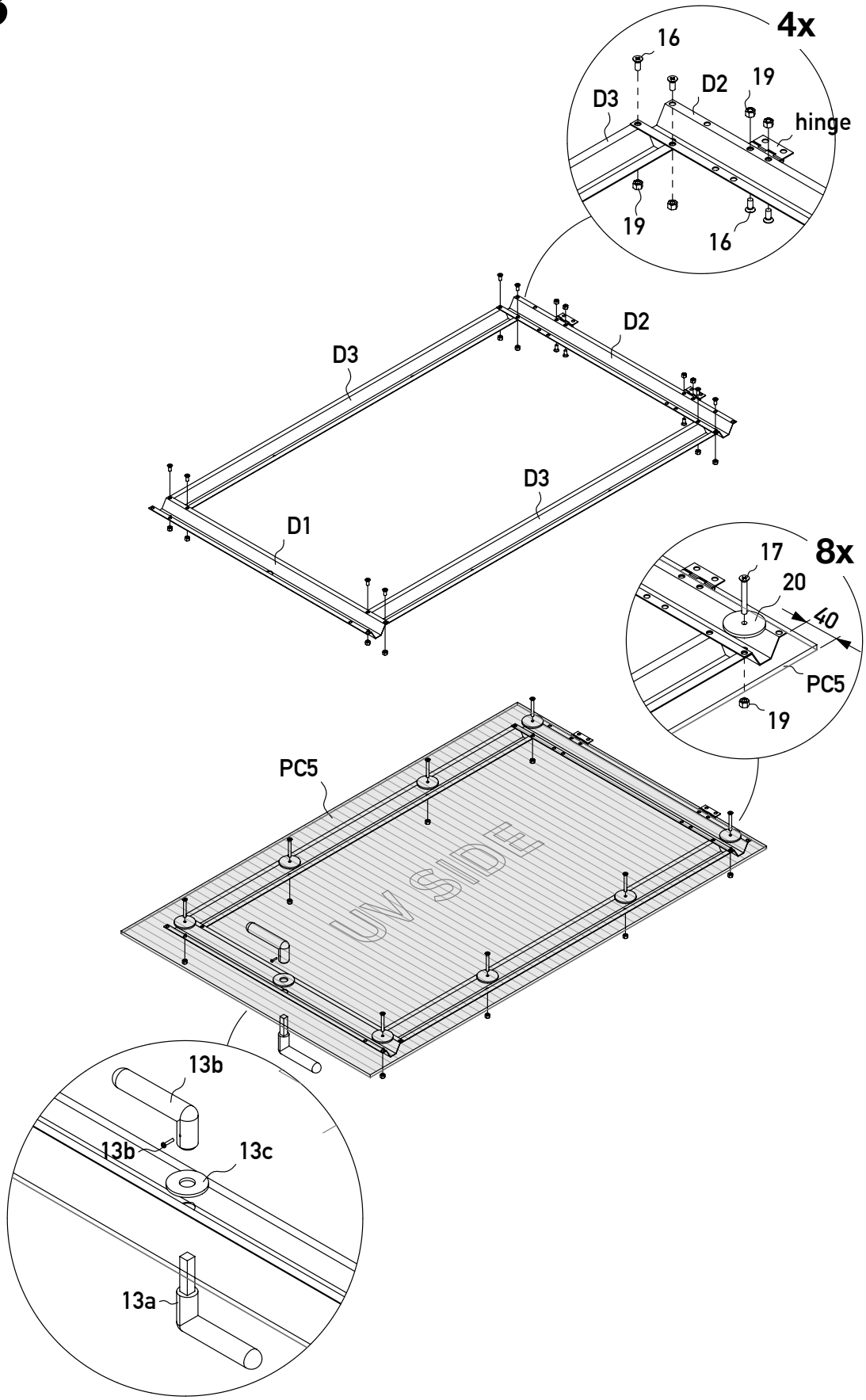
4x
16
D3
D2
19
hinge
19
16
D3
D2
D3
D1
8x
17
20
40
PC5
19
PC5
13b
13b
13c
13a

14

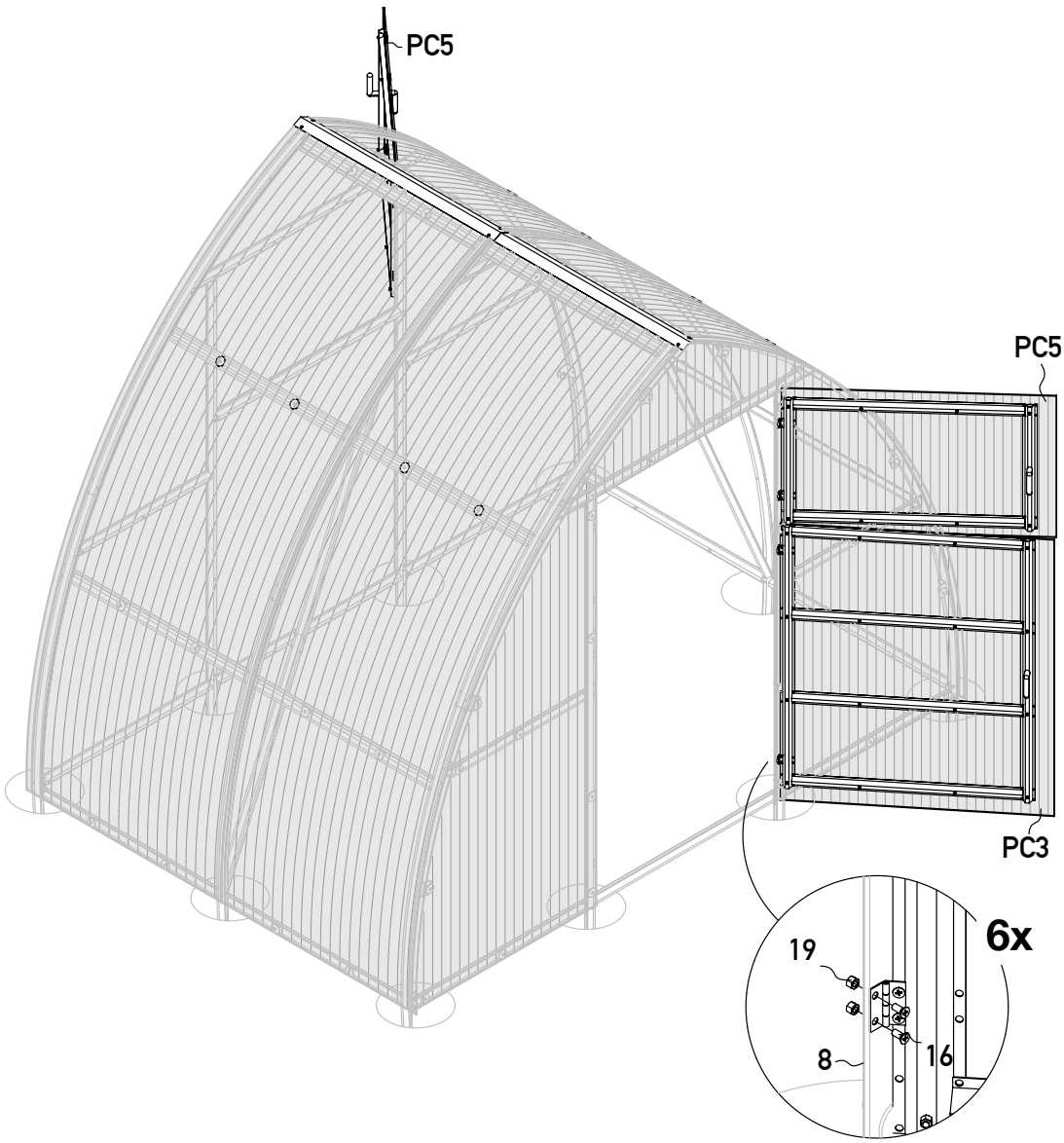

15

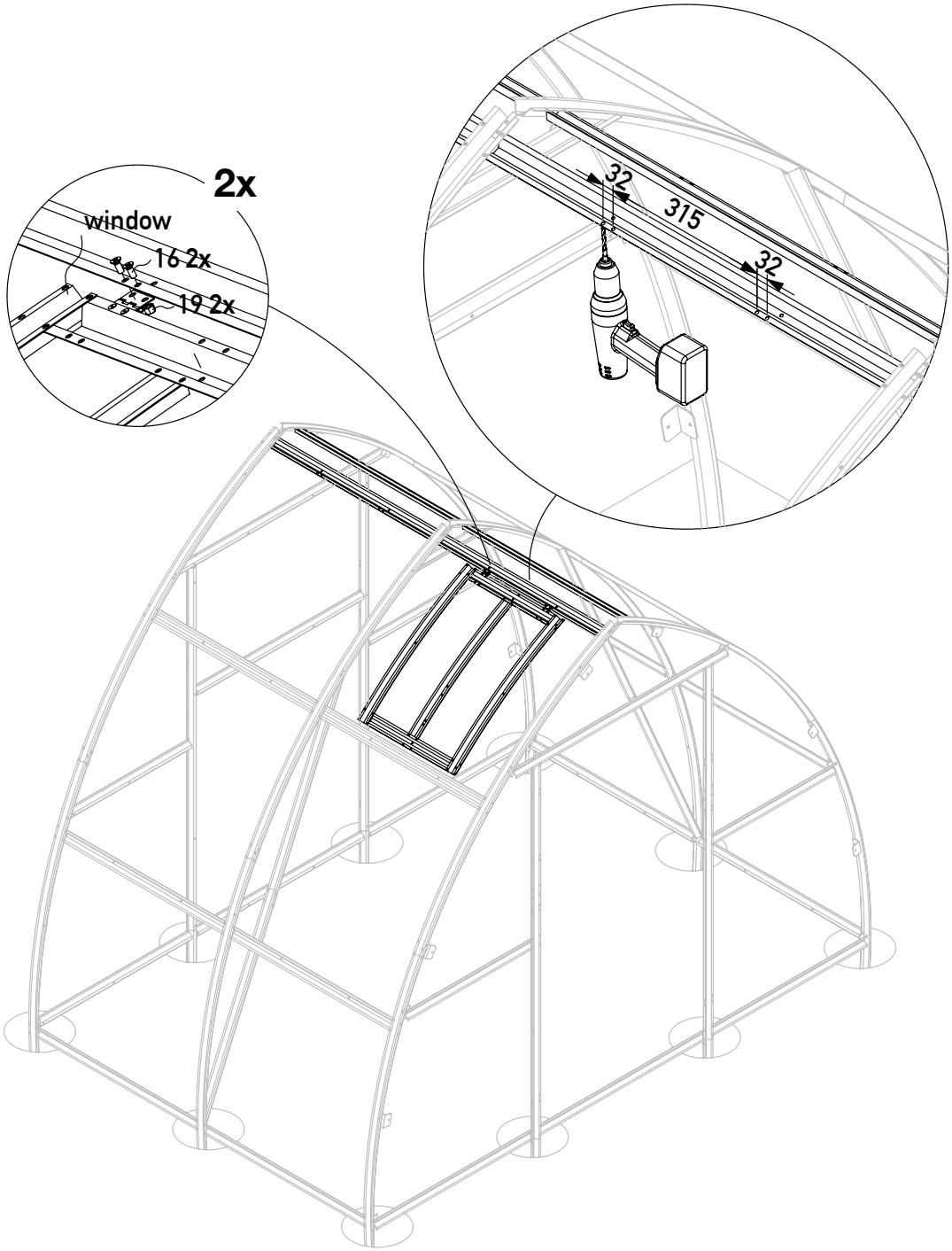

16

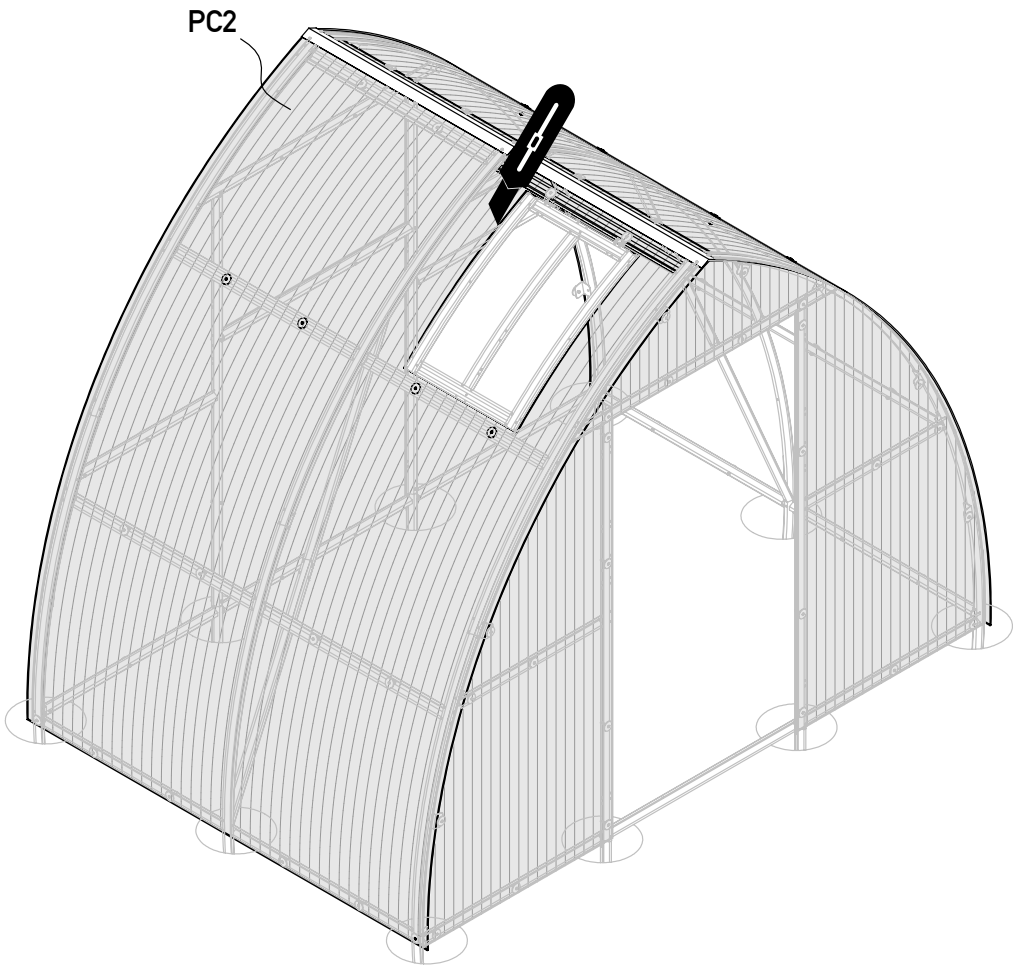

17

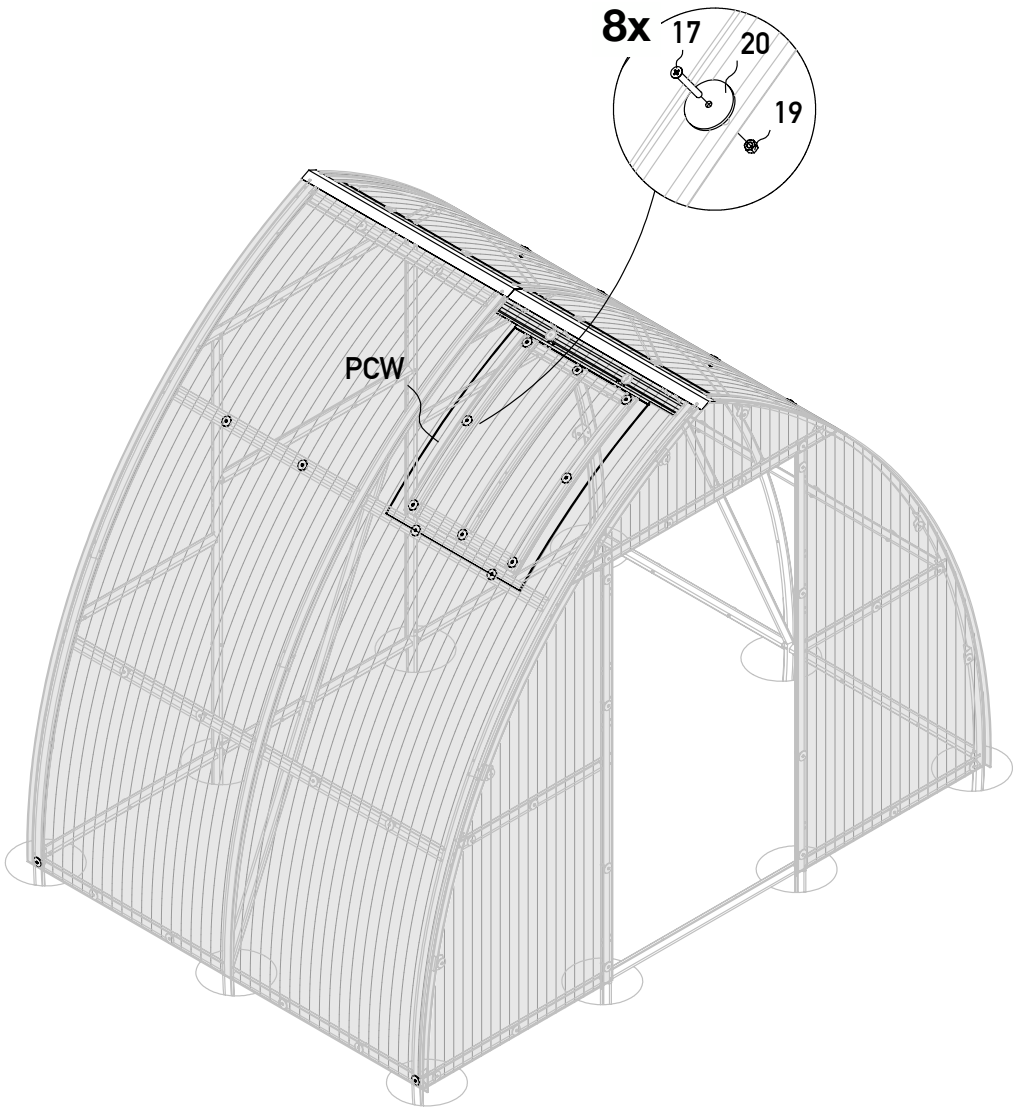

Standart elements

base 2m

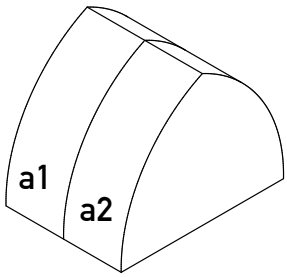

extension 2m

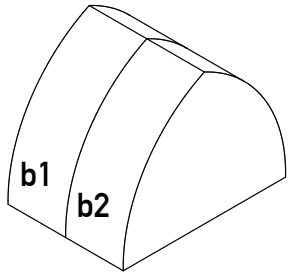

Assembly scheme

base 12m2

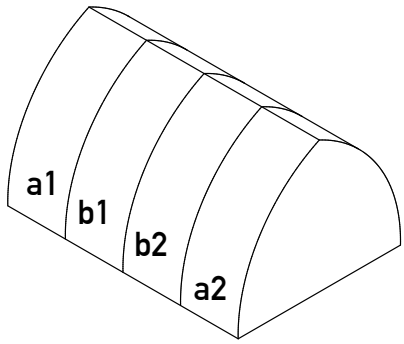

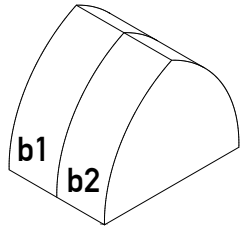

THE LIST OF EXTENSION 2m

№	Name	Length, mm	Qty
1	Arch (down)	1650	4
2	Arch (top)	1650	4
4	Pillars to the ground	200	4
7	Reinforcement	1060	8
9	Fixing profile for arches	375	2
11	Fastenings of the arches - crossbars	955	16
16	Screws M5-12		128
17	Screws M5-40		58
19	Internal screws M5		186
20	Gasket slides		48
30	Screws self-threading		6
C7	Ridge	1050	2
K3	Connection of top post (plate with 4 holes)		2
	Polycarbonate sheets		
PC	Polycarbonate sheet	2100x6000	1

1

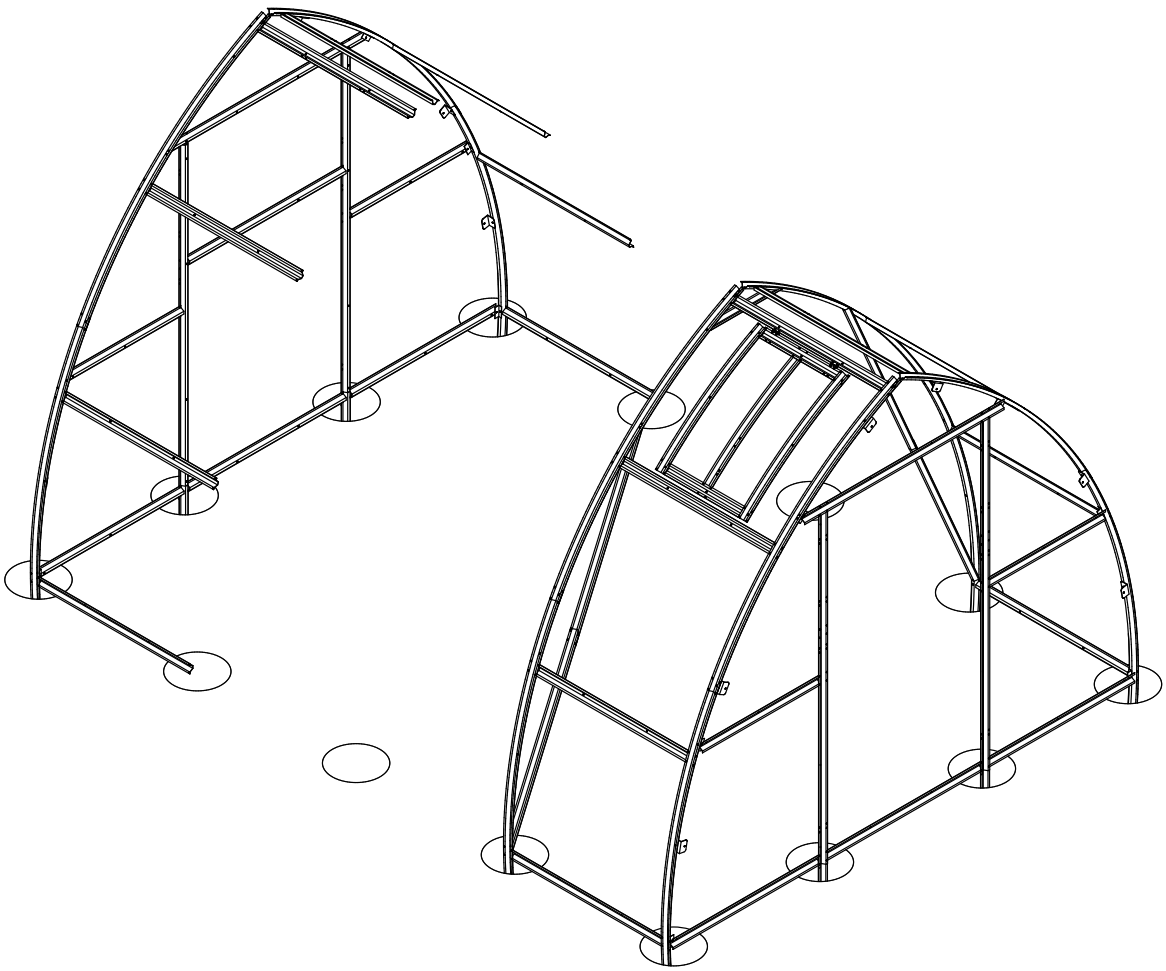

2

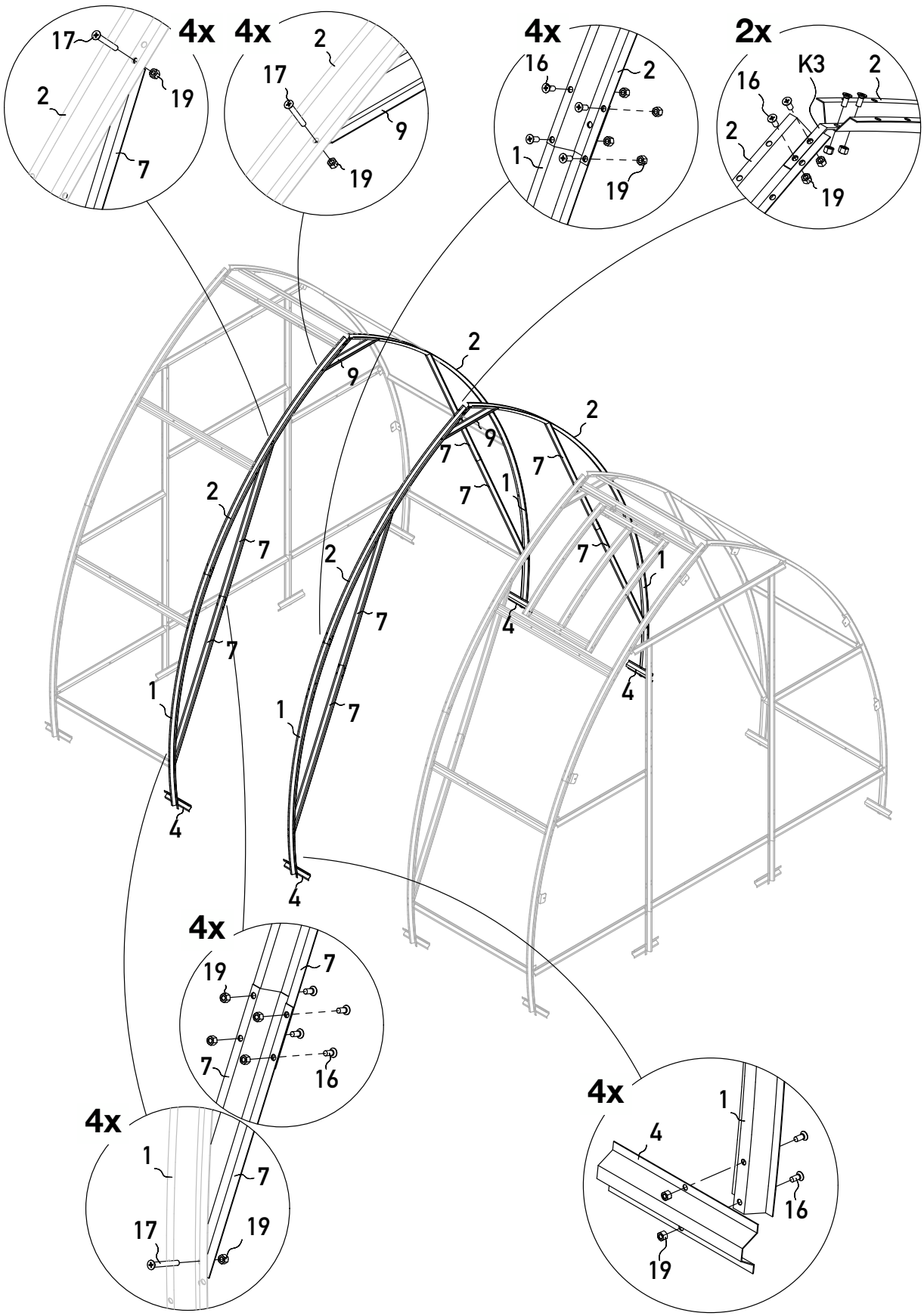

4x
17
2
19
7
4x
2
17
9
19
4x
16
2
1
19
2x
16
K3
2
2
19
2
9
2
9
7
7
7
1
2
7
2
7
7
1
7
1
4
4
1
7
4
4x
19
7
7
16
4x
1
7
17
19
4x
1
4
16
19

3

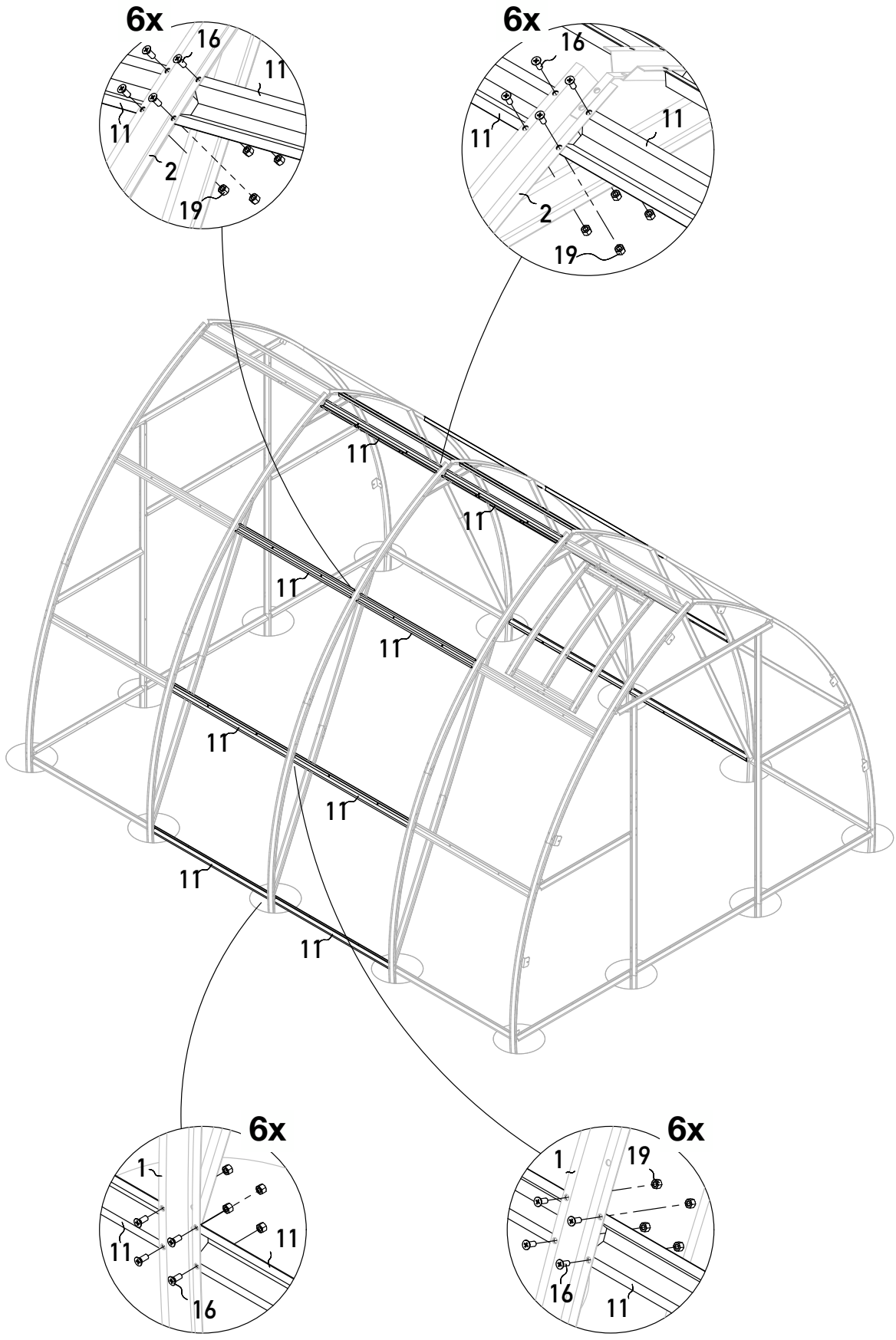
6x
16
11
11
2
19
6x
16
11
11
2
19
11
11
11
11
11
11
6x
1
11
11
16
6x
1
19
16
11

4

